EPOCH DESIGN, LLC

## Nara 4 Drawer Dresser

Congratulations on the purchase of your Nara 4 Drawer Chest of Drawers. This chest of drawers has been crafted to the highest standards of quality and safety and will give you many years of enjoyment and practical use.

Since this is a natural bamboo wood product there will be variations in color and grain, and minor wood grain checking may occur. This is normal and does not compromise the integrity of your dresser. Variation in the character of wood is integral to the beauty and appeal of this furniture, and distinguishes it from lower quality materials.

**Caution: We strongly recommended using the anti-tip over safety straps supplied with this product to reduce the risk of tipover. Furniture tipping over can create a significant hazard in the home, particularly to young children, although adults can be injured as well. It is recommended that casegoods over 30" be secured with some form of anti-tip over device.**

On this insert you will find a list of the hardware and parts necessary for assembly, as well as detailed instructions. Assembly is quite simple and requires only a screwdriver.

If you should require assistance with assembly, part replacement or any other matter, contact the toll-free Epoch Design Service Center from anywhere in the Continental United States, Monday through Friday, 9AM - 5PM Pacific Standard Time at 1-800-589-7990.

**Thank you and Enjoy**

**STEP I**
Hold the handle, remove the screws on the inside of the drawer.
**(As Shown in Diagram I)**

**STEP II**
Now, hold the handle tight to the drawer face with one hand. Twist the screw with one hand. Use a Phillip Head screwdriver to finish tightening the screw.
**(As Shown in Diagram II)**

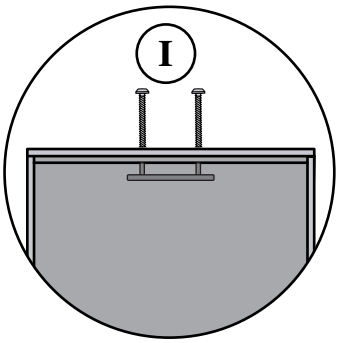


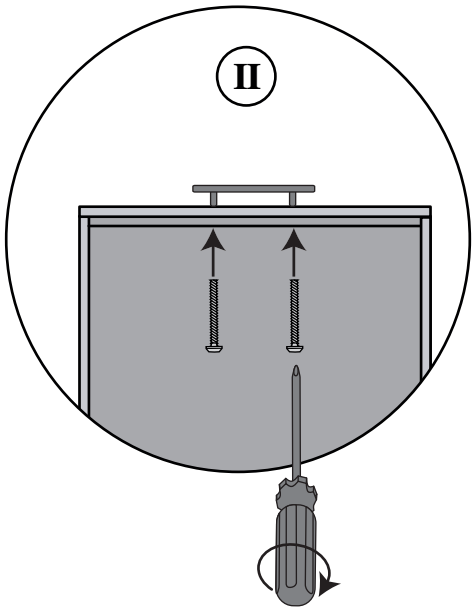


If you find you need to remove a drawer, push and hold the track tabs outward and pull the drawer out the rest of the way.
**(As Shown in Diagram III)**

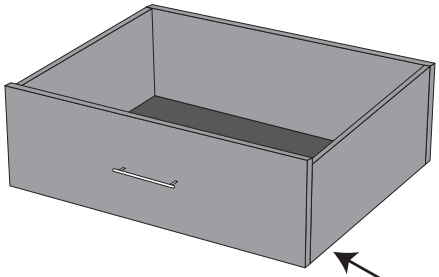

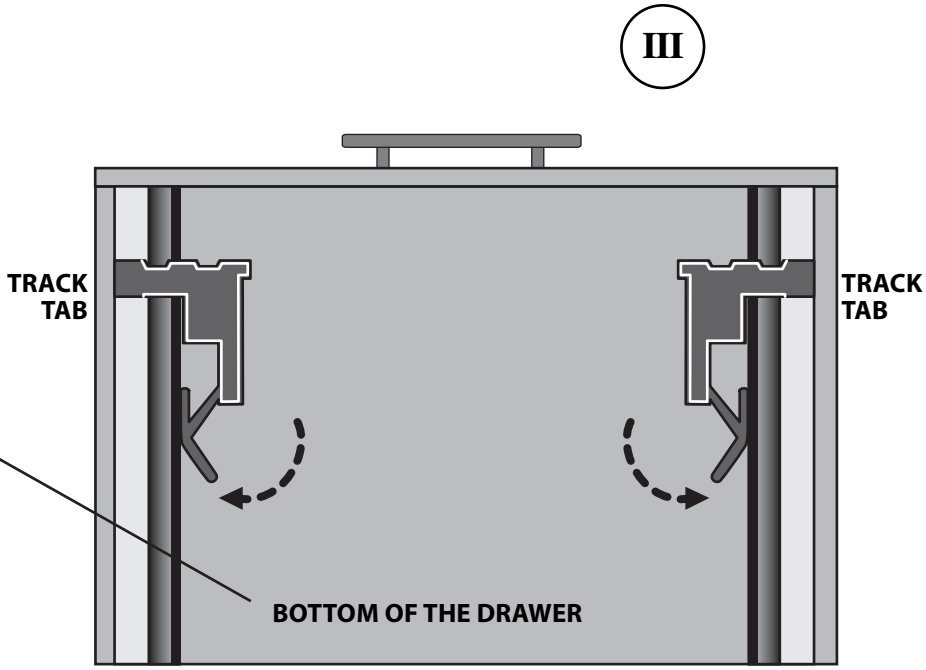


**NOTE: Each drawer is made only for its original location so make sure if you remove more than one they go back in the proper order.**

## PARTS

**Metal Drawer Handle 4**

**Panhead Machine Screw 10**

**WARNING:**
**Furniture tipping over can create a significant hazard in the home, particularly to young children, although adults can be injured as well.**
**It is recommended that casegoods over 30" be secured with some form of anti-tip over device. This dresser comes with anti tip-over straps that reduce the risk of tipover.**
**These can be easily installed in minutes. We strongly recommend that you use them, especially where children are concerned and where earthquakes may pose a hazard.**

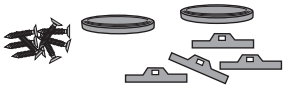

**Tip-Over Straps "parts pack"**

**Have a question?? need a part ASAP?? call 1-800-589-7990 9AM - 5PM PST or email info@epochbydesign.com**